Upgrade Guide

Disclaimer

ASUS is not responsible for direct, indirect, intentional or unintentional damages resulting from improper installation and operation.

Safety precautions

- Before handling components, use a grounded wrist strap or touch a safely grounded object to avoid damaging them due to static electricity.
- Keep liquids or moisture away from your device to avoid short circuits.
- Remove rings, watches, and any other metal objects from your hands.
- Hold components by the edges to avoid touching the ICs.
- Properly install all components before connecting the AC power.
- Do not use power adapters or batteries from other devices to reduce the risk of injury to persons due to fire or explosion. Use only certified power adapters or batteries supplied by the manufacturer or authorized retailers.
- Detach all clips or flaps before removing cables to prevent damage.

- Disconnect cables, connectors, and power plugs by pulling the plug evenly to avoid damage.
- Use the correct screw models on your device to prevent damage.
- Confirm that the cable orientation is correct before connecting any cables.
- Fully remove all adhesive residue after removing and before installing any components.
- Photograph the appearance of cables, cable routing, connectors, and screws for later reference before proceeding with each step.

Pre-repair checklist

- Read the entire manual before starting any service procedures and follow all instructions.
- Back up the data on your device.
- Place your device on a clean and stable surface.
- Turn off your device.
- Disconnect all connected peripherals and cables.
- Disconnect all power cables and remove the battery pack (if applicable).

IMPORTANT!

- If you are uncertain about performing the described service procedures, stop and contact an authorized service center for assistance.
- Purchase replacement components from authorized retailers of this device to ensure maximum compatibility and reliability.

NOTE:

- The illustrations are for reference only.
- The service procedures described in this manual depend on the model configuration and may not reflect the entire servicing process. To service components that are not covered in this manual, please visit an authorized service center for further assistance.
- Keep all adhesive tape, insulating materials, screws, and other removable items in a safe place until the service procedure is completed, as they may be needed during installation.

Repair tools

Screwdriver

Plastic blade

Tweezers

Diagnostic tools

Use ASUS System Diagnostics after completing any service procedures to ensure that all components are working properly.

For more information, visit www.asus.com/support/FAQ/1048490/.

Bottom cover

Before you begin

Read the **Safety Precautions** and complete the **Pre-repair Checklist**.

Removal

IMPORTANT! System power will be cut off automatically upon removal of the bottom cover. To restore power, reattach the bottom cover securely and connect the AC power adapter to your Notebook PC after the servicing is complete.

1. Push the slide lock to the left to release the bottom cover.

2. Ensure the bottom cover is unlocked, then use both hands to slide out the bottom cover until you hear a click.

3. Lift and remove the bottom cover.

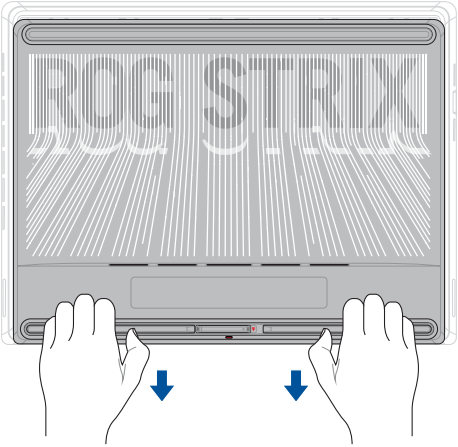

Installation

IMPORTANT! System power will be cut off automatically upon removal of the bottom cover. To restore power, reattach the bottom cover securely and connect the AC power adapter to your Notebook PC after the servicing is complete.

Align and slide the bottom cover back in place until you hear a click.

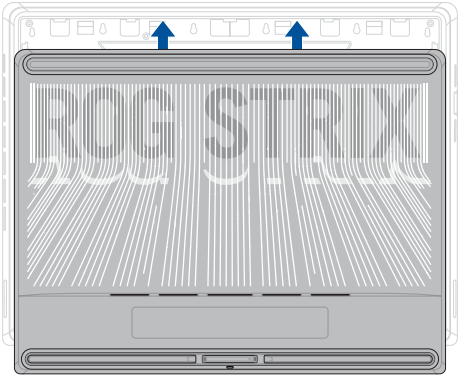

M.2 SSD module

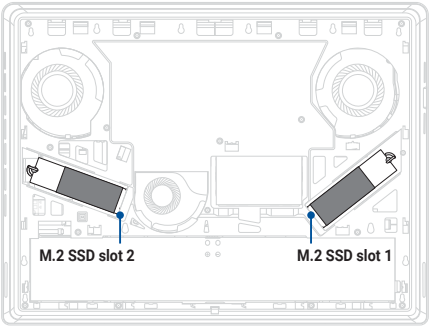

Before you begin

IMPORTANT! Thermal paste, thermal pads, liquid metal, or other thermal interface materials must be thoroughly removed and replaced if this component is removed. Ensure that replacement materials are available before proceeding, or contact an authorized service center for assistance.

NOTE: (For models G615JHR, G615JH, G615JMR, G615JM and G615JPR) The M.2 SSD slot 1 supports PCIe 5.0. Ensure your PCIe 5.0 M.2 SSD is installed in M.2 SSD slot 1 for optimal performance.

1. Read the **Safety Precautions** and **Pre-repair Checklist**.
2. Remove the bottom cover.

Removal

1. Partially peel off the polyester film as shown in the illustration below.

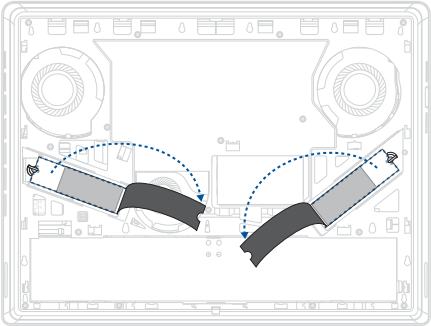

2. Turn the latch knob(s) counterclockwise to release the M.2 SSD module(s).

3. Remove the M.2 SSD module(s) from the motherboard, then remove the tape.

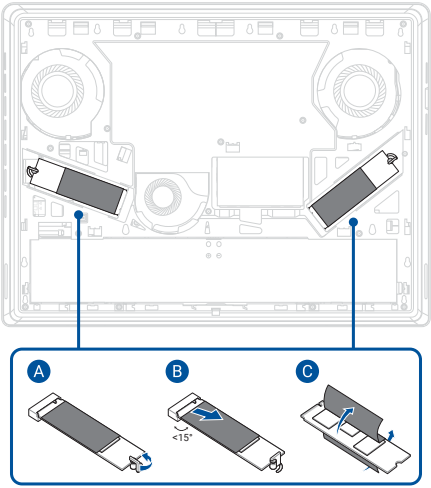

Installation

1. Reattach the tape, then align and insert the M.2 SSD module(s) into the M.2 connector(s).
2. Hold the M.2 SSD module(s) down, then turn the latch knob(s) clockwise to secure the M.2 SSD module(s).

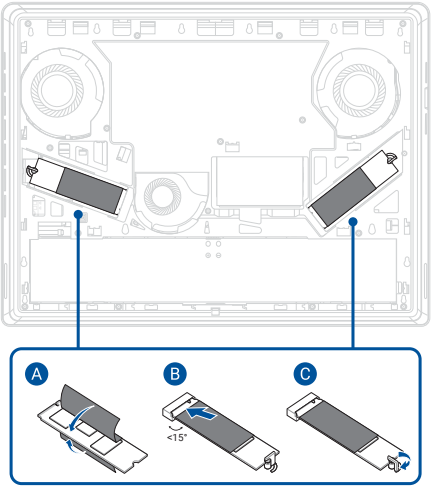

3. Reattach the polyester film.

4. Install the components you removed in the *Before you begin* section.

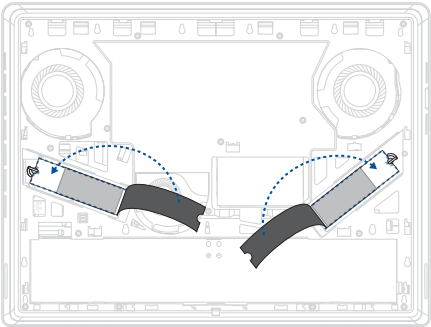

RAM module

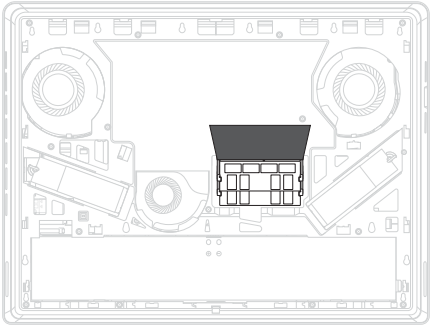

Before you begin

1. Read the **Safety Precautions** and **Pre-repair Checklist**.
2. Remove the bottom cover.

Removal

1. Lift the absorber sheet.

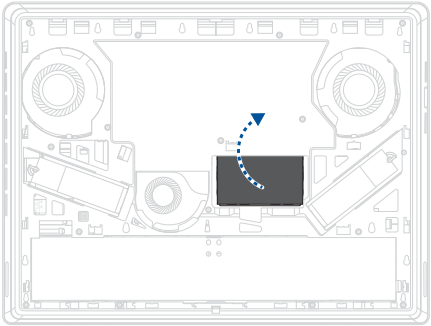

2. Push the clips outwards to remove the RAM module(s).

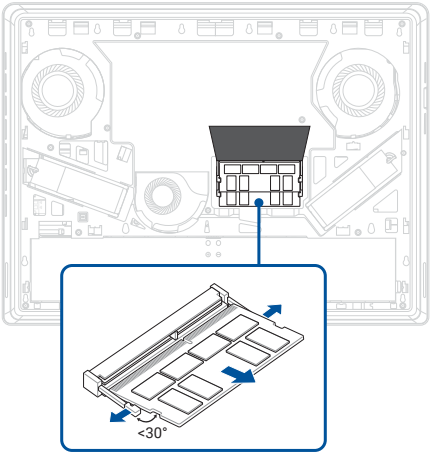

Installation

1. Align and insert the RAM module(s) into the RAM module slot(s).

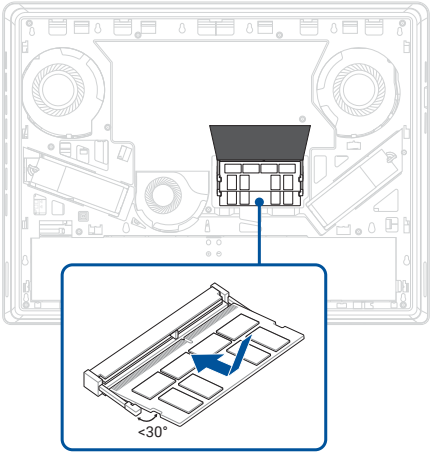

2. Put the absorber sheet back.
3. Install the components you removed in the *Before you begin* section.

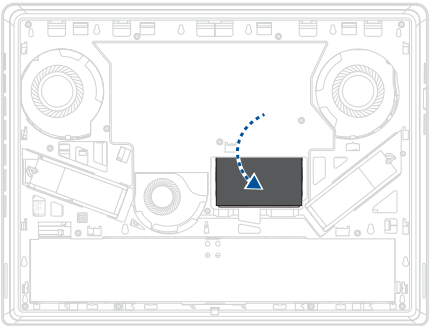

Compartment cover

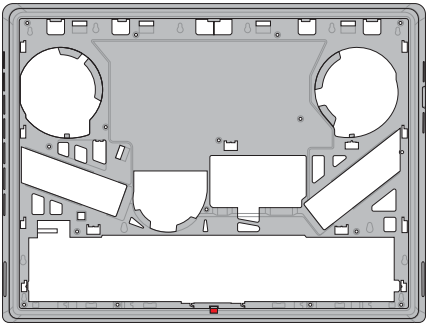

Before you begin

1. Read the **Safety Precautions** and **Pre-repair Checklist**.
2. Remove the bottom cover.

Screw list

- ⊕ M2.0 X 10.0L (14pcs)
- ⊕ M2.0 X 5.5L (2pcs)

Removal

1. Disconnect the cable from the motherboard.

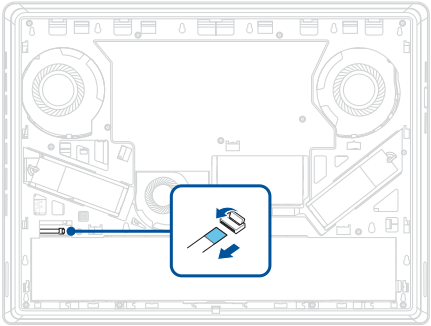

2. Remove the screw(s) from the compartment cover.

3. Use the plastic blade to pry open the indicated area of the bottom cover as shown in the illustration below.

4. Remove the bottom cover.

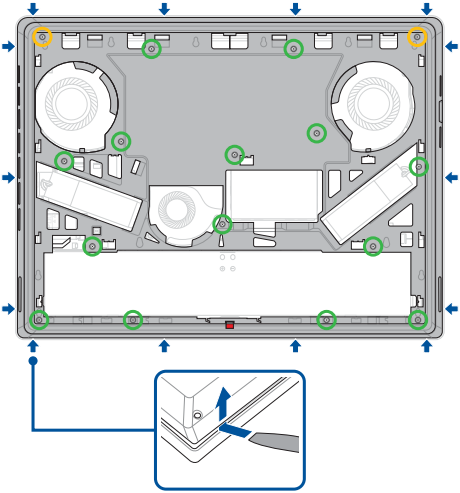

5. Turn the compartment cover over, then disconnect and remove the cable from the back of the compartment cover.

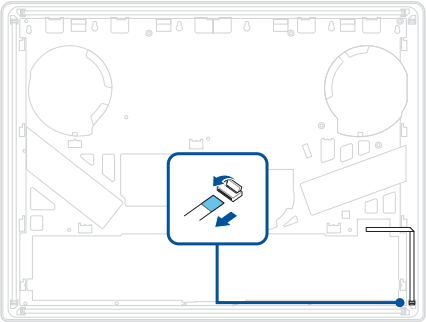

Installation

1. Reconnect the cable to the back of the compartment cover.

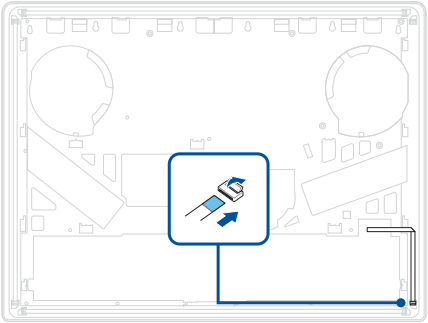

2. Turn the compartment cover over, then install the compartment cover.

3. Gently press down on the compartment cover until it clicks into place.

4. Secure the compartment cover using the screw(s) you removed earlier.

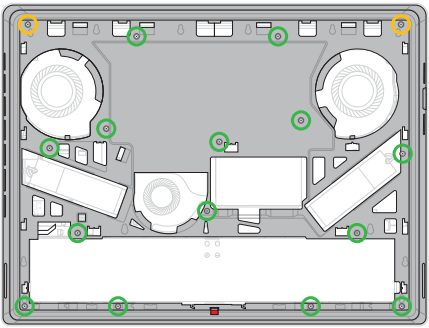

5. Reconnect the cable to the motherboard.

6. Install the components you removed in the *Before you begin* section.

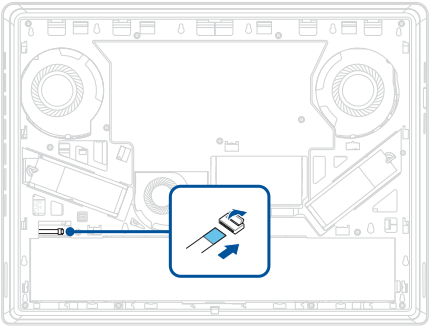

Battery

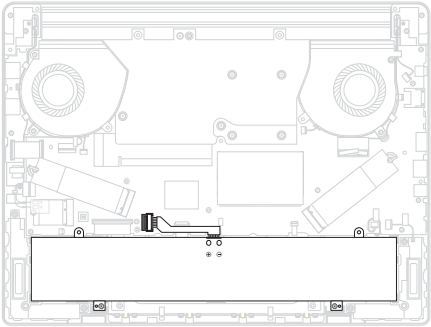

Before you begin

1. Read the **Safety Precautions** and **Pre-repair Checklist**.
2. Remove the bottom cover.
3. Remove the following components:
    - Compartment cover

Screw list

- ⊕ M2.0 X 5.5L (2pcs)
- ⊕ M2.0 X 4.0L (2pcs)

Removal

1. Remove the screw(s) from the fan module, then remove the fan module.

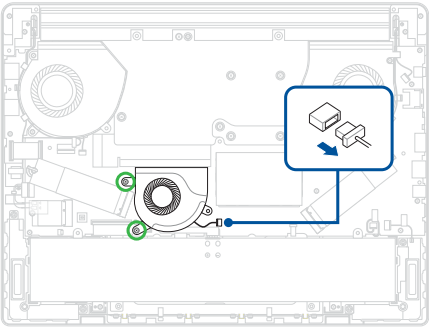

2. Disconnect the battery power cable.

IMPORTANT!

- Disconnect the battery power cable by lifting the side with the red wires first.
- Serious risk of fire or explosion may occur if the battery is punctured. If you are uncertain about proceeding, stop and contact an authorized service center for assistance.

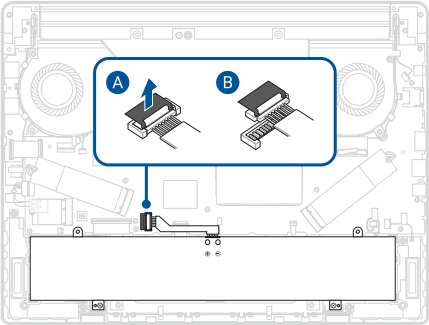

3. Remove the screw(s) from the battery.

4. Remove the battery.

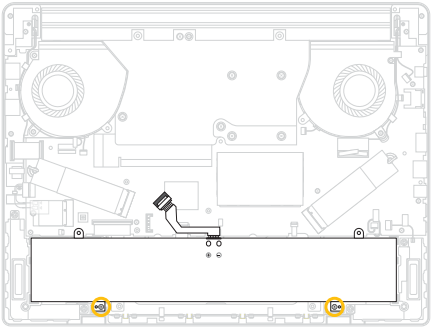

5. Remove the battery power cable from the battery.

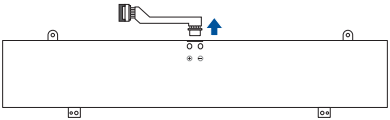

Installation

1. Connect the battery power cable to the battery.

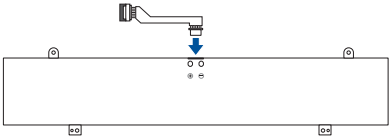

2. Install the battery.
3. Secure the battery using the screw(s) you removed earlier.

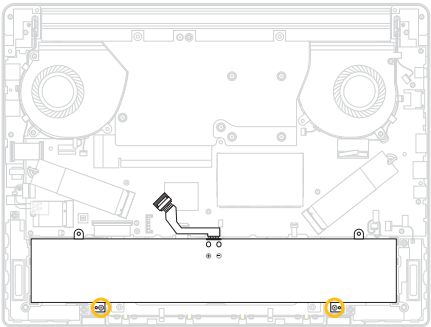

4. Reconnect the battery power cable.

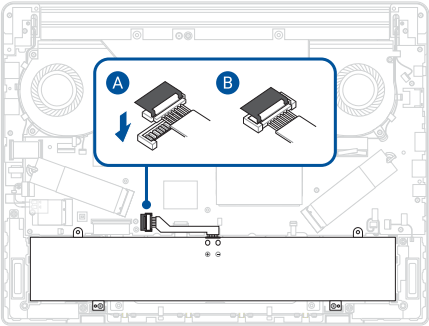
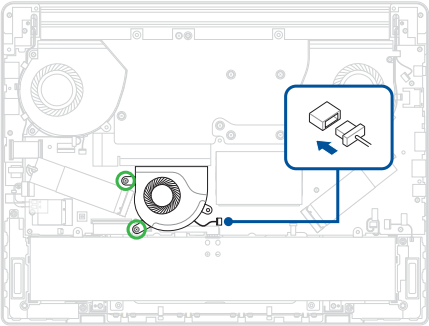
5. Install the fan module.
6. Secure the fan module using the screw(s) you removed earlier, then reconnect the fan cable.
7. Install the components you removed in the *Before you begin* section.