ROG SWIFT PG27AQDPR

USER GUIDE

Table of contents

Notices iii

Safety Information v

Screen Cleaning Instructions (Including Sensors) ix

Takeback Services xii

1.1 Welcome 1-1

1.2 Package Contents 1-1

1.3 Assembling the monitor 1-2

1.4 Detaching the arm/stand (for VESA wall mount) 1-3

1.5 Cable management(include I/O port) 1-4

1.6 Adjusting the monitor 1-5

2.1 Monitor Introduction 2-1

2.1.1 Front View 2-2

2.1.2 Back View 2-5

2.1.3 Other Function(s) 2-6

3.1 OSD (On-Screen Display) Menu 3-1

3.1.1 How to Reconfigure 3-1

3.1.2 OSD Function Introduction 3-3

3.2 Aura 3-20

3.3 Display Widget Center 3-21

3.4 Specifications 3-23

3.5 Enabled & Unavailable OSD Feauture Functions 3-24

3.6 Outline Dimensions 3-25

3.7 Troubleshooting (FAQ) 3-26

3.8 Supported Timing List 3-28

Copyright © 2026 ASUSTeK COMPUTER INC. All Rights Reserved.

No part of this manual, including the products and software described in it, may be reproduced, transmitted, transcribed, stored in a retrieval system, or translated into any language in any form or by any means, except documentation kept by the purchaser for backup purposes, without the express written permission of ASUSTeK COMPUTER INC. (“ASUS”).

Product warranty or service will not be extended if: (1) the product is repaired, modified or altered, unless such repair, modification of alteration is authorized in writing by ASUS; or (2) the serial number of the product is defaced or missing.

ASUS PROVIDES THIS MANUAL “AS IS” WITHOUT WARRANTY OF ANY KIND, EITHER EXPRESS OR IMPLIED, INCLUDING BUT NOT LIMITED TO THE IMPLIED WARRANTIES OR CONDITIONS OF MERCHANTABILITY OR FITNESS FOR A PARTICULAR PURPOSE. IN NO EVENT SHALL ASUS, ITS DIRECTORS, OFFICERS, EMPLOYEES OR AGENTS BE LIABLE FOR ANY INDIRECT, SPECIAL, INCIDENTAL, OR CONSEQUENTIAL DAMAGES (INCLUDING DAMAGES FOR LOSS OF PROFITS, LOSS OF BUSINESS, LOSS OF USE OR DATA, INTERRUPTION OF BUSINESS AND THE LIKE), EVEN IF ASUS HAS BEEN ADVISED OF THE POSSIBILITY OF SUCH DAMAGES ARISING FROM ANY DEFECT OR ERROR IN THIS MANUAL OR PRODUCT.

SPECIFICATIONS AND INFORMATION CONTAINED IN THIS MANUAL ARE FURNISHED FOR INFORMATIONAL USE ONLY, AND ARE SUBJECT TO CHANGE AT ANY TIME WITHOUT NOTICE, AND SHOULD NOT BE CONSTRUED AS A COMMITMENT BY ASUS. ASUS ASSUMES NO RESPONSIBILITY OR LIABILITY FOR ANY ERRORS OR INACCURACIES THAT MAY APPEAR IN THIS MANUAL, INCLUDING THE PRODUCTS AND SOFTWARE DESCRIBED IN IT.

Products and corporate names appearing in this manual may or may not be registered trademarks or copyrights of their respective companies, and are used only for identification or explanation and to the owners’ benefit, without intent to infringe.

Notices

Federal Communications Commission Statement

This device complies with Part 15 of the FCC Rules. Operation is subject to the following two conditions:

- This device may not cause harmful interference, and
- This device must accept any interference received including interference that may cause undesired operation.

This equipment has been tested and found to comply with the limits for a Class B digital device, pursuant to Part 15 of the FCC Rules. These limits are designed to provide reasonable protection against harmful interference in a residential installation. This equipment generates, uses and can radiate radio frequency energy and, if not installed and used in accordance with manufacturer's instructions, may cause harmful interference to radio communications. However, there is no guarantee that interference will not occur in a particular installation. If this equipment does cause harmful interference to radio or television reception, which can be determined by turning the equipment off and on, the user is encouraged to try to correct the interference by one or more of the following measures:

- Reorient or relocate the receiving antenna.
- Increase the separation between the equipment and receiver.
- Connect the equipment to an outlet on a circuit different from that to which the receiver is connected.
- Consult the dealer or an experienced radio/TV technician for help.



The use of shielded cables for connection of the monitor to the graphics card is required to assure compliance with FCC regulations. Changes or modifications to this unit not expressly approved by the party responsible for compliance could void the user's authority to operate this equipment.

Canadian Department of Communications Statement

This digital apparatus does not exceed the Class B limits for radio noise emissions from digital apparatus set out in the Radio Interference Regulations of the Canadian Department of Communications.

This class B digital apparatus complies with Canadian ICES-003.

This Class B digital apparatus meets all requirements of the Canadian Interference - Causing Equipment Regulations.

Cet appareil numérique de la classe B respecte toutes les exigences du Réglement sur le matériel brouiller du Canada.

Declaration of Conformity

This device complies with the requirements set out in the Council Directive on the Approximation of the Laws of the Member States relating to Electromagnetic Compatibility (2014/30/EU), Low-voltage Directive (2014/35/EU), REGULATION (EU) 2024/1781 and RoHS directive (2011/65/EU). This product has been tested and found to comply with the harmonized standards for Information Technology Equipment, these harmonized standards published under Directives of Official Journal of the European Union.

WEEE Symbol Statement

The Waste Electrical and Electronic Equipment (WEEE) Directive (Directive 2012/19/EU) is a European Union law that aims to reduce the environmental impact of electrical and electronic equipment. It mandates producers to take responsibility for the end-of-life management of their products, promoting collection, treatment, and recycling to minimize waste and encourage resource recovery.

Do not throw your Electronic and electrical equipment in municipal waste.

The symbol of the crossed-out wheeled bin on the product or packaging indicates that this product (including any batteries it contains), must not be disposed of with your household waste.

To prevent potential harm to the environment and human health, a collection framework should be used to return, recycle, and recover waste electrical and electronic equipment (WEEE), and this product has been designed to enable the reuse of parts and facilitate the recycling of certain materials.

Improper disposal may involve risks due to the presence of hazardous substances within electrical and electronic equipment, such as lead and BFR and other harmful components.

Check your local recycling services for electronic products. (https://esg.asus.com/en/circular-economy/resource-regeneration/global-take-back-service)

AEEE yönetmeliğine uygundur



New Mexico PFAS Labeling



Safety Information

- Before setting up the monitor, carefully read all the documentation that came with the package.
- To prevent fire or shock hazard, never expose the monitor to rain or moisture.
- Never try to open the monitor cabinet. The dangerous high voltages inside the monitor may result in serious physical injury.
- If the power supply is broken, do not try to fix it by yourself. Contact a qualified service technician or your retailer.
- Before using the product, make sure all cables are correctly connected and the power cables are not damaged. If you detect any damage, contact your dealer immediately.
- Slots and openings on the back or top of the cabinet are provided for ventilation. Do not block these slots. Never place this product near or over a radiator or heat source unless proper ventilation is provided.
- The monitor should be operated only from the type of power source indicated on the label. If you are not sure of the type of power supply to your home, consult your dealer or local power company.
- Use the appropriate power plug which complies with your local power standard.
- Do not overload power strips and extension cords. Overloading can result in fire or electric shock.
- Avoid dust, humidity, and temperature extremes. Do not place the monitor in any area where it may become wet. Place the monitor on a stable surface.
- Unplug the unit during a lightning storm or if it will not be used for a long period of time. This will protect the monitor from damage due to power surges.
- Never push objects or spill liquid of any kind into the slots on the monitor cabinet.
- To ensure satisfactory operation, use the monitor only with UL listed computers which have appropriate configured receptacles marked between 100 ~ 240V AC.
- The socket-outlet shall be installed near the equipment and shall be easily accessible
- If you encounter technical problems with the monitor, contact a qualified servicer.
- Provide an earthing connection before the mains plug is connected to the mains. And, when disconnecting the earthing connection, be sure to disconnect after pulling out the mains plug from the mains.

- Please confirm the distribution system in building installation shall provide the circuit breaker rated 120/240V, 20A (maximum).
- If provided with a 3-pin attachment plug on the power cord, plug the cord into a grounded (earthed) 3-pin outlet. Do not disable the power cord grounding pin, for example, by attaching a 2-pin adapter. The grounding pin is an important safety feature.

Stability Hazard

- The product may fall, causing serious personal injury or death. To prevent injury, this product must be securely attached to the floor/wall in accordance with the installation instructions.
- A product may fall, causing serious personal injury or death. Many injuries, particularly to children, can be avoided by taking simple precautions such as:
- ALWAYS use cabinets or stands or installation methods recommended by the manufacturer of the product set.
- ALWAYS use furniture that can safely support the product.
- ALWAYS ensure the product is not overhanging the edge of the supporting furniture.
- ALWAYS educate children about the dangers of climbing on furniture to reach the product or its controls.
- ALWAYS route cords and cables connected to your product so they cannot be tripped over, pulled or grabbed.
- NEVER place a product in an unstable location.
- NEVER place the product on tall furniture (for example, cupboards or bookcases) without anchoring both the furniture and the product to a suitable support.
- NEVER place the product on cloth or other materials that may be located between the product and supporting furniture.
- NEVER place items that might tempt children to climb, such as toys and remote controls, on the top of the product or furniture on which the product is placed.
- If the existing product is going to be retained and relocated, the same considerations as above should be applied.
- CLASS 1 CONSUMER LASER PRODUCT
  EN 50689:2021
- This equipment is not suitable for use in locations where children are likely to be present.

ASUS CONTACT INFORMATION

ASUSTeK Computer Inc

Address	1F., No. 15, Lide Rd., Beitou Dist., Taipei City 112, Taiwan
Telephone	+886-2-2894-3447
Fax	+886-2-2894-7798
E-mail	info@asus.com.tw
Website	http://www.asus.com.tw/

Technical Support

Telephone	+86-21-38429911

ASUS Computer International (America)

Address	48720 Kato Rd, Fremont, CA 94538, USA
Telephone	+1-510-739-3777
Fax	+1-510-608-4555
Website	http://usa.asus.com/

Technical Support

Telephone	+1-812-282-2787 (English Only)
	+1-905-370-2787 (French Only)
Online Support	http://support.asus.com/

ASUS Computer GmbH (Germany and Austria)

Address	Harkortstr. 21-23 D-40880 Ratingen, Germany
Telephone	+49-1805-010920
Website	http://www.asus.de/
Online Contact	http://www.asus.de/sales

Technical Support

Telephone	+49-1805-010923
Support Fax	+49-2102-959911
Online Support	http://support.asus.com/

WARNING

Usage of other than specified head- or earphones can result in hearing loss due to excessive sound pressures.

Excessive sound pressure from earphones and headphones can cause hearing loss. Adjustment of the equalizer to maximum increases the earphones and headphones output voltage and therefore the sound pressure level.

Do not dispose of electrical appliances as unsorted municipal waste, use separate collection facilities.

Contact your local government for information regarding the collection systems available.

If electrical appliances are disposed of in landfills or dumps, hazardous substances can leak into the groundwater and get into the food chain, damaging your health and well-being.

When replacing old appliances with new once, the retailer is legally obligated to take back your old appliance for disposal at least for free of charge.

HDMI™

HIGH-DEFINITION MULTIMEDIA INTERFACE

Prevent Tipping

When using the display, fasten the OLED to a wall using a cord or chain that can support the weight of the monitor in order to prevent the monitor from falling.

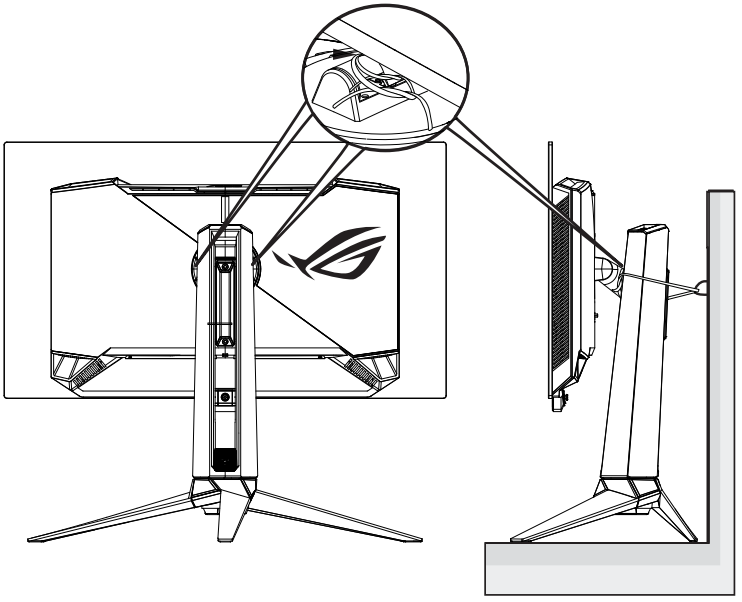

- Display design may differ from those illustrated.
- Installing must be done by a qualified technician , and please contact your supplier for more information.
- For the Models with net weight >=7kg. Please select the suitable way to Prevent Tipping.
- For the models with VESA Mount, please use method ❶, install the screws with ring to the VESA Mount hole, then tie the cord or chain to the wall. Otherwise, please use method❷ to tie the cord or chain to the stand and then fix it to the wall.

Screen Cleaning Instructions (Including Sensors)

When cleaning displays (including sensors), special care and proper methods are required to avoid damaging the screen. Please follow the recommendations below for safe and effective cleaning.

- Required Materials

1. Microfiber cloth: Use a soft microfiber cloth that will not scratch the screen surface.

2. Purified water: Avoid water containing minerals or impurities.

3. Spray bottle: Use it to lightly spray purified water onto the microfiber cloth — never directly onto the screen.

- Cleaning Procedure

1. Power Off the Device: Before lifting, repositioning, or cleaning the display, disconnect all cables and unplug the power cord. When moving the monitor, always hold it by the edges of the display. Never lift or carry the monitor by the stand or power cable.

2. Dry Cleaning: Turn off the monitor and unplug the power cord. Use a clean, dry microfiber cloth to gently wipe the screen surface and remove dust or loose particles.

3. Damp Cleaning: Lightly spray a small amount of purified water onto the microfiber cloth. Do not spray liquid directly onto the screen or sensor. Gently wipe the screen surface without applying excessive pressure.

4. Dry the Screen: Use another clean microfiber cloth to gently dry the screen surface and ensure no liquid residue remains. If necessary, repeat the cleaning process 2–3 times.

- Important Precautions

1. Do not use alcohol-based or ammonia-based cleaners. These chemicals may damage the screen coating.

2. Do not spray liquid directly onto the screen. Liquid may seep into the edges of the panel and damage internal components.

3. Do not apply excessive force. Excessive pressure may damage the panel or leave scratches.

4. Never use tissues, paper towels, kitchen towels, or regular cloth towels. These materials contain relatively coarse fibers that can easily leave fine scratches on the screen surface.

By following the instructions above, you can safely and effectively clean display panels (including sensors) while maintaining image clarity and preventing damage.

Important: Screen Protective Film Removal & Screen Maintenance Instructions

Before using your display, please carefully read the following instructions regarding the screen surface films and coatings. Improper handling may result in permanent damage that is not covered under warranty.

1. Must Be Removed: Shipping Protective Film (OLED only)

To protect the panel from scratches during transportation, the screen surface is covered with a transparent protective shipping film.

- Removal Instructions: Locate the colored pull tab, typically found at the lower-left or lower-right corner of the screen. Slowly and evenly peel off the entire protective film following the direction indicated by the tab.
- Reasons for Removal

1. Heat Dissipation: OLED pixels generate heat during operation. If the protective film is not removed, heat may accumulate on the panel surface, potentially causing overheating, accelerated panel aging, and significantly increasing the risk of image retention or burn-in.

2. Sensor Performance: The protective film may obstruct the ambient light sensor located beneath the display surface, resulting in abnormal automatic brightness adjustment behavior.

3. Image Quality: The shipping film is not made from optical-grade material. Removing it is necessary to experience the OLED panel's intended contrast ratio and color accuracy.

2. Do NOT Remove: Polarizer Layer & Functional Coatings

After removing the transparent shipping protective film with the pull tab, the remaining dark layer tightly bonded to the screen surface is part of the panel structure itself.

- **WARNING: Do not attempt to peel, scrape, or remove the dark film layer using fingernails, blades, or any tools.This layer is the panel's polarizer or anti-reflective coating (AR/AG coating), which is a critical component of the display system.**
- **Consequences: Removing or damaging this layer may cause the display to malfunction, including a completely white screen or abnormal color distortion. Such damage is considered physical misuse and will immediately void the product warranty.**

The following symptoms are normal with the monitor:

- The screen may flicker during the initial use due to the nature of the fluorescent light. Turn off the Power Switch and turn it on again to make sure that the flicker disappears.
- You may find slightly uneven brightness on the screen depending on the desktop pattern you use.
- When the same image is displayed for hours, an afterimage of the previous screen may remain after switching the image. The screen will recover slowly or you can turn off the Power Switch for hours.
- When the screen becomes black or flashes, or cannot work anymore, contact your dealer or service center to fix it. Do not repair the screen by yourself!

Conventions used in this guide



WARNING: Information to prevent injury to yourself when trying to complete a task.



CAUTION: Information to prevent damage to the components when trying to complete a task.



IMPORTANT: Information that you MUST follow to complete a task.



NOTE: Tips and additional information to aid in completing a task.

Where to find more information

Refer to the following sources for additional information and for product and software updates.

1. **ASUS websites**
   The ASUS websites worldwide provide updated information on ASUS hardware and software products. Refer to **http://www.asus.com**
2. **Optional documentation**
   Your product package may include optional documentation that may have been added by your dealer. These documents are not part of the standard package.
3. **Protect your eyes with ASUS EYE CARE Monitors**
   The latest ASUS monitors feature exclusive Blue Light Filter and Flicker free technologies to keep your eyes healthy in today's digital world. Refer to
   https://www.asus.com/Microsite/display/eye_care_technology/

4. **About Flicker**
   https://www.asus.com/Microsite/display/eye_care_technology/

5. **About Low Blue Light:**
   https://www.asus.com/us/support/FAQ/1009742/

Takeback Services

ASUS recycling and takeback programs come from our commitment to the highest standards for protecting our environment. We believe in providing solutions for our customers to be able to responsibly recycle our products, batteries and other components as well as the packaging materials.

Please go to https://esg.asus.com/en/circular-economy/resource-regeneration/global-take-back-service for detail recycling information in different region.

1.1 Welcome

Thank you for purchasing the ASUS® OLED Gaming monitor!

The latest widescreen OLED monitor from ASUS provides a crisper, broader, and brighter display, plus a host of features that enhance your viewing experience.

With these features, you can enjoy the convenience and delightful visual experience that the monitor brings to you!

1.2 Package Contents

Check your package for the following items:

- ✓ OLED Monitor
- ✓ Quick Start Guide
- ✓ Warranty Card
- ✓ Power Cord
- ✓ ROG Pouch
- ✓ ROG Sticker
- ✓ Monitor Base
- ✓ Wall Mount Kit
- ✓ Microfiber Cloth
- ✓ HDMI cable (optional)
- ✓ DP cable (optional)
- ✓ USB cable (optional)

If any of the above items is damaged or missing, contact your retailer immediately.

1.3 Assembling the monitor

To assemble the monitor:

- **While assembling the monitor arm/base, we recommend that you keep the monitor inside its pulp mold (Expanded Polystyrene) packaging.**

1. Place the display on a cloth on the table, gently attach the stand to the VESA mount area until the latch locks the stand, then attach the base to the arm and fix with the screw to join them tightly. You can easily tighten the screw by fingers.
2. Adjust the monitor to the angle that is most comfortable for you.

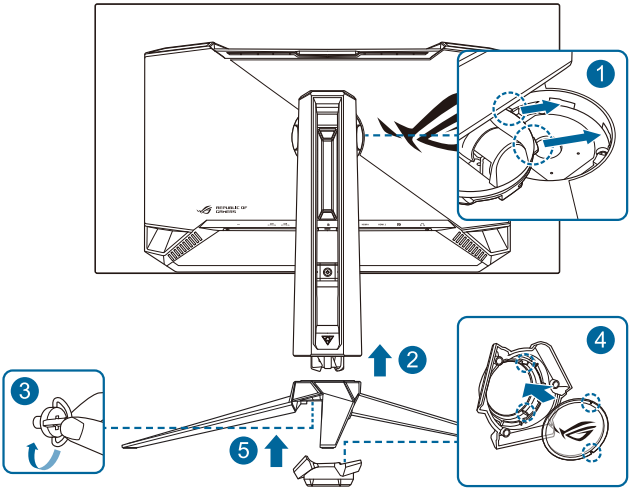

1.4 Detaching the arm/stand (for VESA wall mount)

- We recommend that you cover the table surface with soft cloth to prevent damage to the monitor.

The detachable stand of this monitor is specially designed for VESA wall mount.

To detach the arm/stand

1. Disconnect power and signal cables. Carefully put the front of the monitor face down on a clean table.
2. Push the locking clips inward to detach the stand from the monitor.
3. Hold the stand with both hands, tilt the base and slide it out.
4. Detach the stand (arm and base) from the monitor.

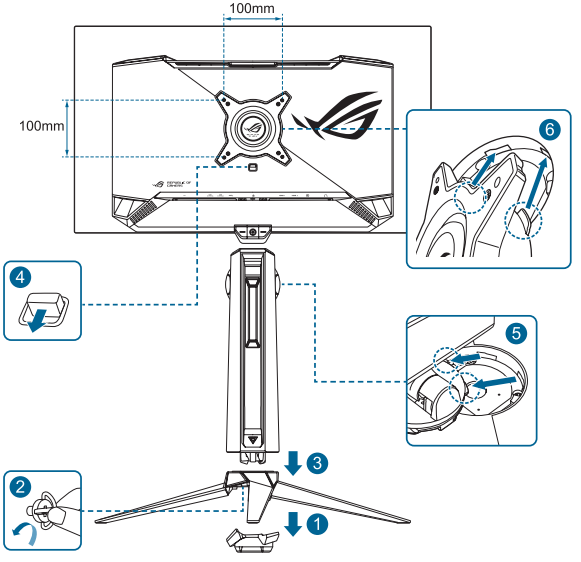

- The VESA wall mount kit (100 x 100 mm) is purchased separately.
- Use only the UL Listed Wall Mount Bracket with minimum weight/load 22.7kg.
- Mounting screw size is M4 x 8 mm (4pcs).

1.5 Cable management(include I/O port)

You can organize the cables with the help of the cable management hole.

- Arranging the cables

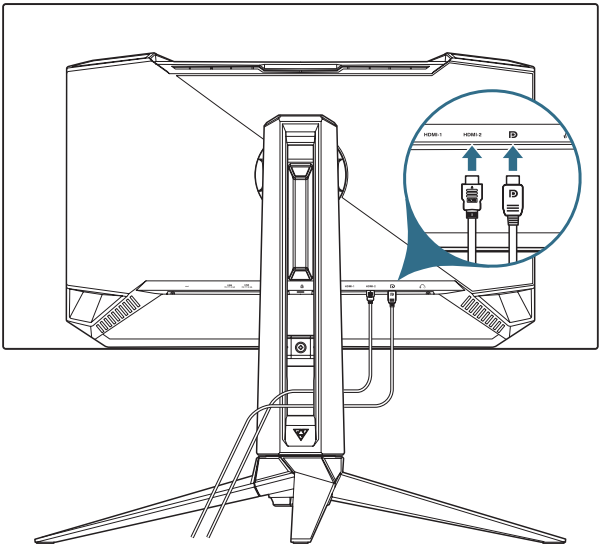

- To connect the HDMI/DisplayPort:

  a. Plug one end of the HDMI/DisplayPort to the monitor's HDMI/ DisplayPort.

  b. Connect the other end of the HDMI/DisplayPort to your device's HDMI/DisplayPort.

When these cables are connected, you can choose the desired signal from the Input Select item in the OSD menu.

If you need to replace the power cord or the connection cable(s), please contact ASUS customer service.

1.6 Adjusting the monitor

- For optimal viewing, we recommend that you look at the full face of the monitor, then adjust the monitor to the angle that is most comfortable for you.
- Hold the stand to prevent the monitor from falling when you change its angle.
- Adjust the monitor follow the pictures for the most comfortable viewing for you.

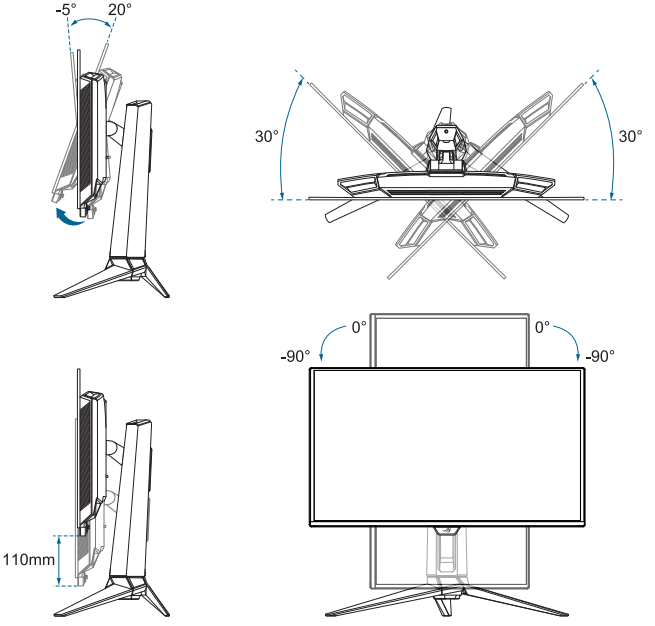

It is normal that the monitor slightly shakes while you adjust the viewing angle.

2.1 Monitor Introduction

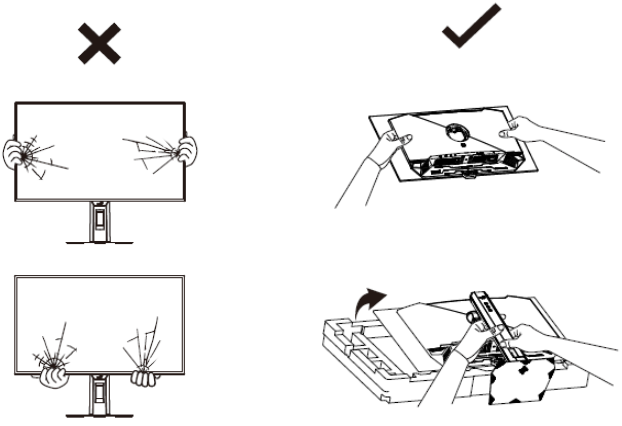

Monitor Handling / Disassembly SOP

1. Hold the monitor by both sides of the rear cover when carrying it.

2. Do not press on the front surface of the panel to avoid cracks, bright spots, or display abnormalities.

3. Before disassembly, place the monitor flat on the table.

4. Avoid applying force to a single point during disassembly, and ensure the monitor is placed securely.

5. Handle the monitor carefully during the entire process to avoid impact, bending, or scratches.

2.1.1 Front View

Use the control button on the back of the monitor to adjust the monitor settings.

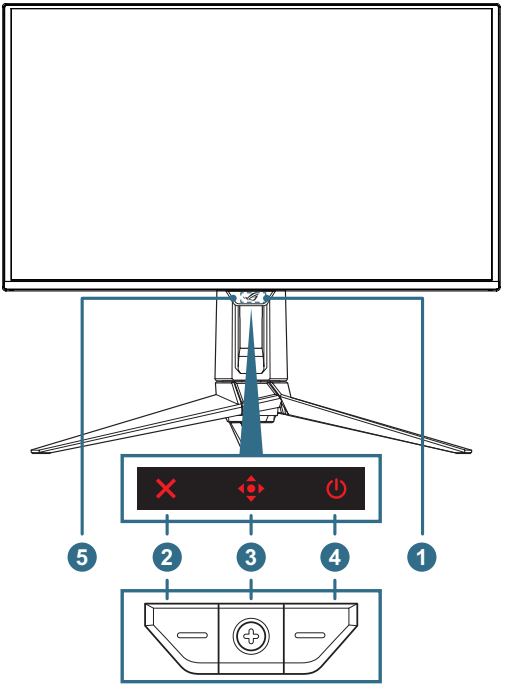

1. Power Indicator:
   - The color definition of the power indicator is as the below table.

Status	Description
Red	ON
Red flashing	Error detection mode
OFF	OFF
Orange	Standby mode/No signal
Orange flashing	Pixcel cleaning

2. ✕ **Close button**:
   - When the OSD menu is OFF, press the button to activate the ***Pixel cleaning*** hotkey.
   - When the OSD menu is ON, press to exit the OSD menu.

3. **Control buttons**:

a. When the OSD menu is OFF:

- Press the button to activate the OSD menu.
- Move the button right to activate the ***GamePlus*** hotkey.
- Move the button left to activate the ***Volume*** hotkey.
- Move the button up to activate the ***GameVisual*** hotkey.
- Move the button down to activate the ***Input Select*** hotkey.

To change the preset hotkey function, go to the MyFavorite > Shortcut menu.

b. When the OSD menu is ON:

- Press the button to enact the selected OSD menu item.
- Move the button right to enter the submenu.
- Move the button left to return to the previous menu or exit the menu.
- Move the button up to move your selection up or increase value.
- Move the button down to move your selection down or decrease value.

4. **Power button**: Turn the monitor on/off.

5. **Neo proximity sensor**: Measure the distance between the user and monitor.

GamePlus Shortcut menu	GamePlus-FPS	GamePlus-Crosshair

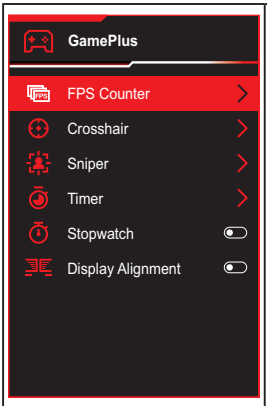

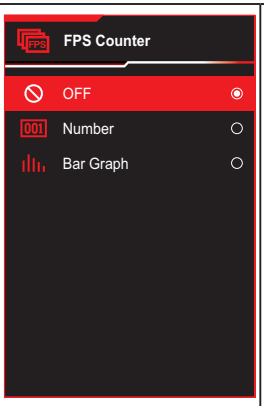

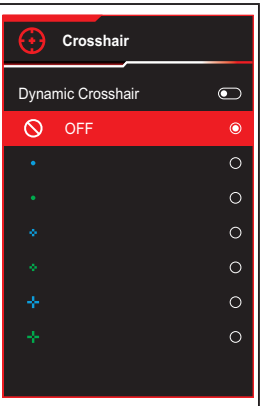

GamePlus-Sniper

GamePlus-Timer

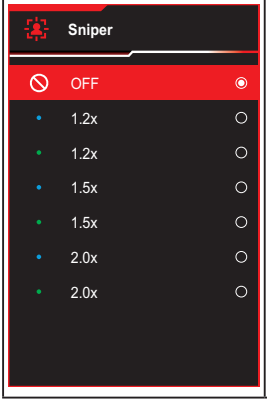

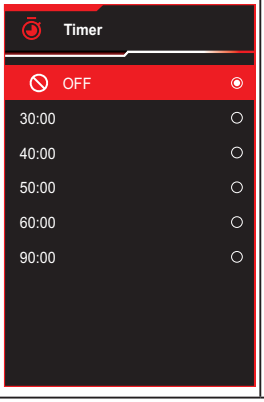

2.1.2 Back View

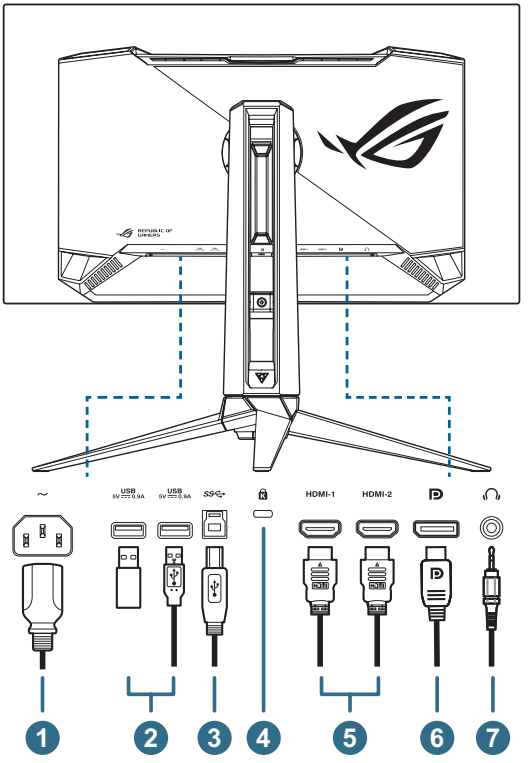

1. AC-IN port
2. USB3.2 Gen 1 downstream ports
3. USB3.2 Gen 1 upstream port
4. Kensington lock slot
5. HDMI ports
6. DisplayPort
7. Earphone jack

2.1.3 Other Function(s)

- **Tripod socket atop**

1/4-inch tripod socket on the monitor stand allows you to mount a camera, audio equipment or additional display.

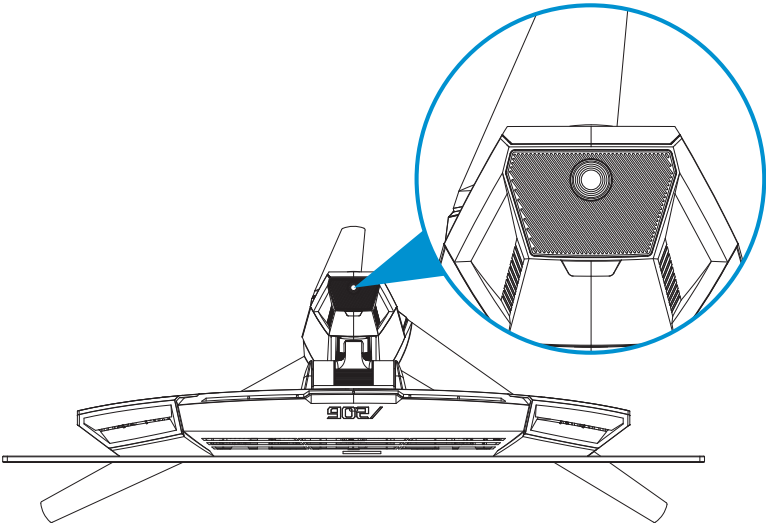

3.1 OSD (On-Screen Display) Menu

3.1.1 How to Reconfigure

1. After the monitor is turned on, press the button to activate the OSD **Quick Menu.**

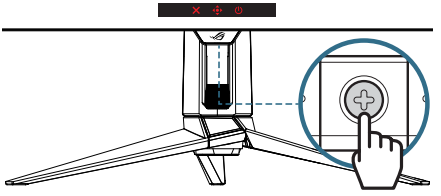

2. When the **Quick Menu** is activated:

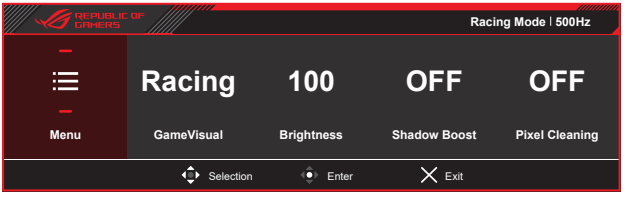

OSD (On Screen Display) icon	Control button operation	Function
Quick Menu	Move up/down	Switches to the previous/ next menu setting.
	Move left/right	• Selects the previous/ next menu item. • Selects the desired parameter.
	Press (center)	Confirms the selection.

3. When the Menu is activated:

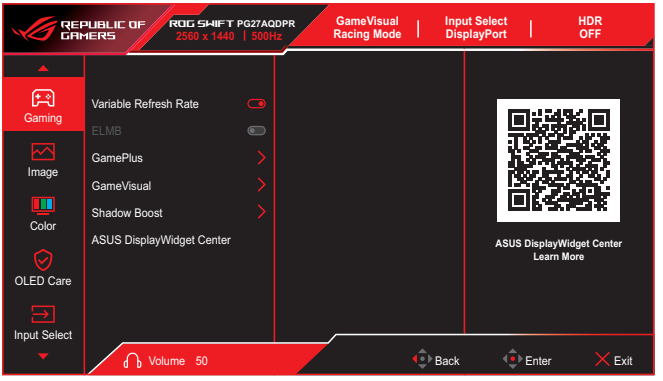

OSD (On Screen Display) icon	Control button operation	Function
Menu	Move up/down	• Selects the previous/ next menu item. • Selects the desired parameter.
	Move left/right	Switches to the previous/ next menu setting.
	Press (center)	Confirms the selection.

- **ASUS DisplayWidget Center:** Displays a QR code for you to access the information about ASUS DisplayWidget Center.

3.1.2 OSD Function Introduction

Set **Power Setting** to **Performance Mode** to enable function.

3.1.2.1 Gaming

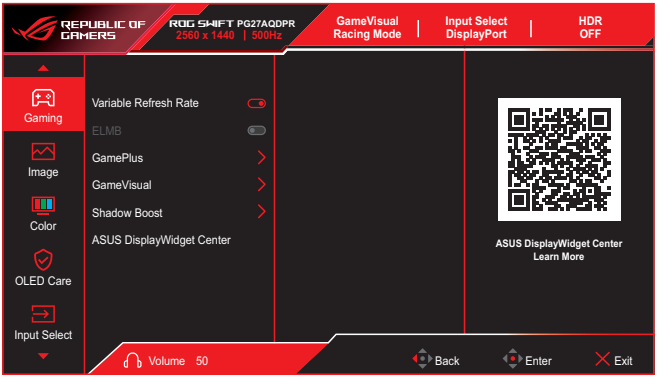

Menu Option		Description	Remark
Variable Refresh Rate	On/Off	Works with Adaptive-Sync, G-Sync Compatible, and FreeSync graphics sources to dynamically match the display's refresh rate to content frame rates. This reduces stutter and input lag while saving power.	1. Variable Refresh Rate can only be activated within 48Hz~500Hz. 2.For supported GPUs, minimum PC system and driver requirements, please contact the GPU manufactures. 3.When Variable Refresh Rate is enabled, the following functions will be unavailable:ELMB
ELMB Setup	ELMB	The ELMB Setup menu allows users to configure motion blur reduction features for fast-moving content. ELMB ELMB eliminates screen tearing, reduces ghosting, and minimizes motion blur during gameplay.	1.To activate ELMB, please turn off VRR first. 2.This function is only available when the refresh rate is 120Hz/240Hz in normal mode. 3.The following function will be deisabled when ELMB turn on :Variable Refresh Rate,Uniform Brightness,Aspect Control,Blue Light Filter,Auto Logo Brightness,HDR Setting,Sniper

Menu Option		Description	Remark
GamePlus	FPS Counter	The GamePlus function provides a set of built-in gaming tools to enhance your in-game experience. It includes the following features: FPS Counter Displays real-time frames per second (FPS) to indicate how smoothly the game is running. You can choose to show the FPS as a number or a bar graph on screen. Crosshair Provides 6 built-in crosshair styles, so you can choose the one that best fits your game. Also includes a Dynamic Crosshair option that adjusts the crosshair automatically based on gameplay. Sniper Sniper mode is designed for first-person shooter games (only available when HDR is OFF). You can choose from three magnification levels — 1.2×, 1.5×, and 2.0× — with different alignment styles. Timer Displays a countdown timer on the upper-left corner of the screen to help you track gameplay or rest time. You can choose from the following preset durations:30:00, 40:00, 50:00, 60:00, or 90:00 minutes. Stopwatch Displays a stopwatch on the upperleft corner of the screen to help you track elapsed time during gameplay or activities. The stopwatch starts from 00:00 and counts upward until manually stopped. Display Alignment Displays alignment lines on all four sides of the screen to help you align multiple monitors more precisely and easily.	
GamePlus	Crosshair		
GamePlus	Sniper		
GamePlus	Timer		
GamePlus	Stopwatch		
GamePlus	Display Alignment		

Menu Option		Description	Remark
GameVisual	Scenery Mode	GameVisual provides a set of preset display modes optimized for different usage scenarios, using ASUS GameVisual™ Video Intelligence Technology. Easily switch between modes to match your content. Scenery Mode Optimized for displaying landscapes and outdoor photos. Racing Mode Best suited for fast-paced racing games. Cinema Mode Ideal for watching movies and cinematic content. RTS/RPG Mode Designed for Real-Time Strategy and Role-Playing games. FPS Mode Tailored for First-Person Shooter games to enhance visibility in dark scenes. sRGB Cal Mode Perfect for viewing photos and graphics with accurate color reproduction. MOBA Mode Best choice for Multiplayer Online Battle Arena games. Night Vision Enhances visibility in dark environments or low-light scenes. User Mode Allows manual adjustment of more image settings like brightness, contrast, and color.	
GameVisual	Racing Mode		
GameVisual	Cinema Mode		
GameVisual	RTS/RPG Mode		
GameVisual	FPS Mode		
GameVisual	sRGB Cal Mode		
GameVisual	MOBA Mode		
GameVisual	Night Vision		
GameVisual	User Mode		
Shadow Boost	Dynamic Shadow Boost Level 3/ Level 2/ Level 1/Off	Enhances visibility in dark areas by adjusting the monitor's gamma curve, making dark scenes and objects easier to see without overexposing brighter areas. Offers three levels (Level 1 / 2 / 3) of adjustment to suit different preferences. Includes a Dynamic Shadow Boost option that automatically optimizes dark scenes based on the content.	
ASUS DisplayWidget Center	QRcode	Refer to Chapter 3.2	

3.1.2.2 Image

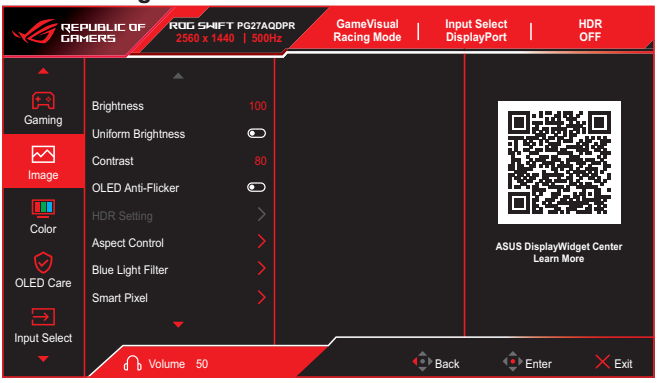

Menu Option		Description	Remark
Brightness	Adjustable from 0~100	Adjust screen brightness When HDR is enabled, only adjustment via Adjustable HDR is supported.	
Uniform Brightness		With the feature enabled, the system will not adjust the maximum brightness of the screen when the screen is displayed in a different screen size.	
Contrast	Adjustable from 0~100	Adjust contrast to enhance image detail and depth.	Not adjustable in HDR mode.
OLED Anti-Flicker		Designed to enhance your viewing experience by stabilizing the refresh rate within a specified range.	OLED Anti-Flicker only supports in the limited refresh rate. This function is only available when the input source is DisplayPort.

Menu Option		Description	Remark
HDR Setting	Gaming HDR	Function Description: Delivers richer details and more realistic colors, especially noticeable in scenes with strong contrast between light and dark areas. Gaming HDR: A mode designed for gamers. Cinema HDR: Ideal for movies and cinematic content. Console HDR:Tailored for gaming consoles.	1. In HDR mode, brightness is adjusted automatically and cannot be set manually. 2. When HDR is enabled,the following functions are unavailable: ELMB, Sniper, GameVisual, Shadow Boost, Brightness, Contrast, Aspect Control (only mutually exclusive if Dynamic Dimming is supported), Blue Light Filter, Color Temp., Display Color Space, Gamma, Saturation, Six Saturation, Power Saving.
HDR Setting	Cinema HDR		
HDR Setting	Console HDR		
HDR Setting	DisplayHDR 500 True Black		
HDR Setting	Adjustable HDR	You can adjust the intensity of the HDR effect. Adjustable HDR is enabled, the following settings can be customized: Brightness, Contrast, Color Temperature, Saturation, and Six-axis Saturation.	When this feature is enabled, the following functions will be unavaila ble:ELMB, Sniper, GameVisual, Shadow Boost, Gamma, Blue Light Filter, Power Saving, ASCR, Display Color Space, Aspect Control (only mutually exclusive if Dynamic Dimming is supported).
HDR Setting	Dynamic Brightness Boost	This function is designed for use with Console HDR. Enabling this function will enhance the HDR brightness.	

Menu Option		Description	Remark
Aspect Control	16:9 Full	Fills the screen by stretching the image without preserving the aspect ratio. The image becomes larger but may distort, affecting the viewing experience.	1. The 16:9 aspect ratio achieves better results only when the full-screen resolution simulates a 24.5-inch display. 2. FPS game size; you can also select point-to-point scaling in Windows display settings. 3. When this feature is enabled, the following functions will be disabled: VRR, ELMB, ELMB SYNC.
Aspect Control	16:9 24.5" Simulation	Displays the image at a 24.5-inch size, maintaining the aspect ratio without distortion, but the image appears smaller.	
Aspect Control	16:9 Pixel by Pixel	16:9 native mode maps pixels directly, keeping clarity and aspect ratio. Low resolution images may show black borders.	
Aspect Control	Square Full	Stretches the image to fill the entire screen without preserving the aspect ratio. The image becomes larger but may be distorted, affecting the viewing experience.	
Aspect Control	Square Equivalent	Scales the image up while maintaining the original aspect ratio to avoid distortion, but may result in black borders.	
Aspect Control	Square Pixel by Pixel	Displays the image at its original resolution without scaling or stretching.	

Menu Option		Description	Remark
Blue Light Filter	Level4/ Level3/ Level2/ Level1/OFF	Reduce the energy level of blue light emitted from the harmful blue light. OFF: No change. Level 1~4: The higher the level, the less blue light is scattered. When Blue Light Filter is activated, the default settings of Racing Mode will be automatically imported. • Between Level 1 to Level 3, the Brightness function is user-configurable. • Level 4 is optimized setting. The Brightness function is not user-configurable.	1. The ELMB function will be disabled when Blue Light Filter is turned on. 2. The monitor uses low blue light panel and compliance with TUV Rheinland Low Blue Light Hardware Solution at factory reset/default setting mode. Please refer to the following to alleviate eye strains: • Users should take some time away from the display if working for long hours. It is advised to take short breaks (at least 5 mins) after around 1 hour of continuous working at the computer. Taking short and frequent breaks is more effective than a single longer break. • To minimize eye strain and dryness in your eyes, users should rest the eye periodically by focusing on objects that are far away. • Eye exercises can help to reduces eye strain. Repeat these exercises often. If eye strain continues please consult a physician. Eye exercises: (1) Repeating look up and down (2) Slowly roll your eyes (3) Move your eyes diagonal. • High energy blue light may lead to eye strain and AMD (Age- Related Macular Degeneration). Blue light filter to reduce 70% (max.) harmful blue light to avoiding CVS (Computer Vision Syndrome).
Smart Pixel	Level3/ Level2/ Level1/OFF	Smart Pixel enhances overall image details in real time for clearer and more vivid visuals.	
VividPixel	Adjustable from 0~100	Enhances image edges and details to improve image clarity.	

3.1.2.3 Color

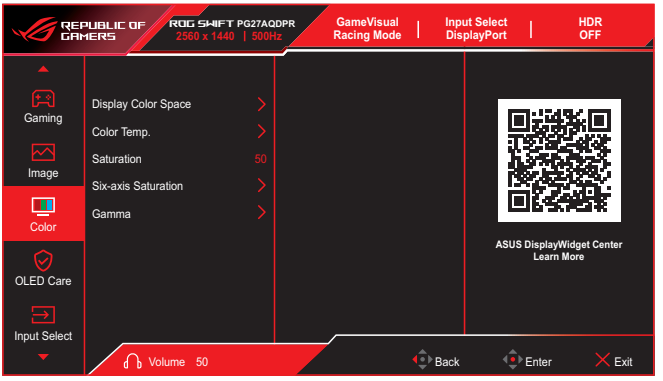

Menu Option		Description	Remark
Display Color Space	sRGB	-	Selects the color space for the monitor color output.
Display Color Space	DCI-P3	-	
Display Color Space	Wide Gamut	-	
Color Temp.	4000K	-	
Color Temp.	5000K	-	
Color Temp.	6500K	-	
Color Temp.	7500K	-	
Color Temp.	8200K	-	
Color Temp.	9300K	-	
Color Temp.	10000K	-	
Color Temp.	User	R Adjustable from 0~100	
Color Temp.	User	G Adjustable from 0~100	
Color Temp.	User	B Adjustable from 0~100	
Saturation	Adjustable from 0~100		

Menu Option		Description	Remark
Six-axis Saturation	R	R Adjustable from 0~100	Adjusts the saturation for R, G, B, C, M, Y.
Six-axis Saturation	G	G Adjustable from 0~100	
Six-axis Saturation	B	B Adjustable from 0~100	
Six-axis Saturation	C	C Adjustable from 0~100	
Six-axis Saturation	M	M Adjustable from 0~100	
Six-axis Saturation	Y	Y Adjustable from 0~100	
Gamma	1.8		Gamma is a curve used to adjust image brightness and contrast, affecting how the brightness of an image signal (such as a photo file or video signal) is mapped to what is shown on the screen. Allows you to set the color mode to 1.8, 2.0, 2.2, 2.4 or 2.6.
Gamma	2.0		
Gamma	2.2		
Gamma	2.4		
Gamma	2.6		

3.1.2.4 OLED Care

Configure the screen protection related settings.

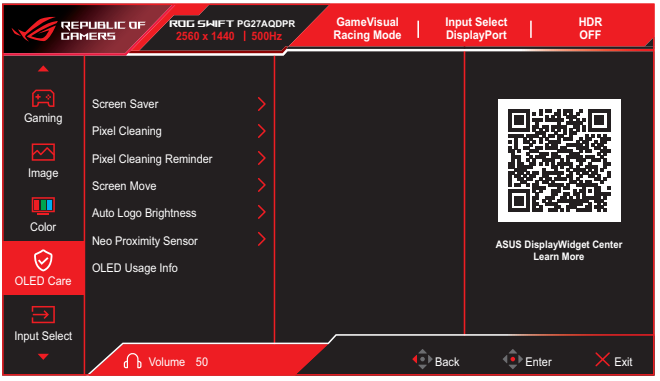

Menu Option		Description	Remark
Screen Saver	Screen Diming Control	Enable/Disable the screen saver function. The screen brightness will automatically decrease when there is no change on the screen.	
	Outer Diming Control		
	Global Diming Control		
Pixel Cleaning		It calibrates any issues that may arise on the screen when your monitor has been turned on for a long time. The process will take approximately 6 minutes. This function will automatically activate when the monitor is turn off. Do not unplug the power cord while it is in progress. If you power on the monitor, the Pixel Cleaning will stop operating.	
Pixel Cleaning Reminder	Off	Set a reminder for user to perform the Pixel Cleaning.	The screen may have mura and image sticking due to OLED characteristic during the initial use or re-used after a long time. It is advised to perform Pixel Cleaning while turning on monitor to make sure situation disappear.
	2 Hours		
	4 Hours		
	8 Hours		

Menu Option		Description	Remark
Screen Move	Strong	Select the screen movement level to prevent image sticking on the display panel.	
	Middle		
	Light		
Auto Logo Brightness	Logo Dectetion	Enable this function to allow the system to automatically adjust the logo brightness to correct the potential picture quality issues.	
	TaskBar Dectetion		
	Boundary Dectection		
Neo Proximity Sensor	Distance Selection	If the function is enabled and the system does not detect the presence of object within 60 cm – 120 cm (depending on your selection) over the present time, the monitor will apply Screen-off.	Tailored mode: Allows users to customize the Neo Proximity Sensor detection distance. It is recommended to set the distance within 120cm. After a set period of time, the monitor will apply Screen-off. • The angle and placement of the monitor sensor might affect the signal detection results. • Before using the sensor, make sure the sensor window is clean and free of dirt, and ensure that no objects are covering the sensor window. • Before use, please spray pure water on the included microfiber cloth and wipe the logo plate sensor window. • If the sensor does not detect motion within its detection range during the setting time, the screen will perform a screen-off and display a black screen to protect the screen and prevent burnin, which is a normal phenomenon. • It is recommended that players disable this feature during near-static activities to prevent the sensor from detecting no movement within its range, which could cause the screen to display a black screen and negatively impact the user experience.

Menu Option		Description	Remark
	Auto-away Timer (min)	If no user is detected, the system initiates a countdown according to your Auto-away Timer settings (1-15 minutes). Any detected movement during this period will stop and reset the timer. Should the countdown expire without further activity, the screen will automatically turn off.	
	Motion Sensitivity	Motion Sensitivity adjusts how responsively the sensor monitors user movement to ensure the screen remains active while in use. Higher Sensitivity enables the sensor to detect subtle micro-movements.	
OLED Usage Info		Record the number of times the Pixel Cleaning has been performed and displays the Pixel Cleaning interval information.	

3.1.2.5 Input Select

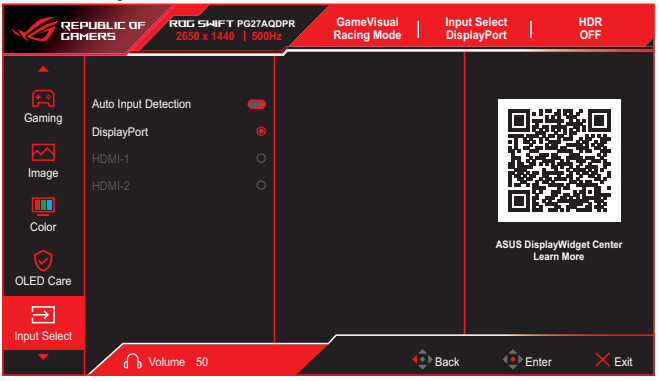

Menu Option		Description	Remark
Auto Input Detection	On / Off	Once turned on, it automatically detects the signal and switches the input source.	
DisplayPort	Choose the input source as needed.	Select DisplayPort as the video input source.	
HDMI 1/2		Select HDMI as the video input source.	

3.1.2.6 Lighting Effect

Configure the lighting effect for the rear cover and base cover.

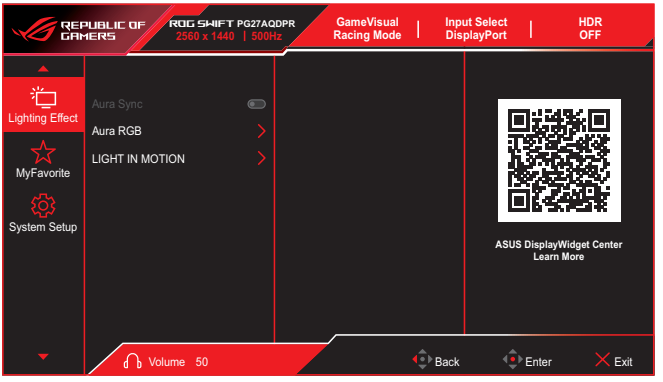

Menu Option		Description	Remark
Aura Sync		Allow you to turn on or off the Aura Sync function that synchronizes the Aura RGB light effect among all supported devices.	The Aura RGB function will be disabled when AURA Sync is turned on.
Aura RGB	Off	There are five living colors that can be chosen: Rainbow, Color Cycle, Static, Breathing, Strobing, and OFF. You can manually change the R/G/B/C/M/Y color for Static, Breathing, and Strobing modes.	The Aura Sync function will be disabled when AURA RGB is turned on.
	Rainbow		
	Color Cycle		
	Static		
	Breathing		
	Strobing		
LIGHT IN MOTION	Level 3	Select the brightness level of the light on the stand. The adjusting range is from Level 1 ~ Level 3 and OFF.	
	Level 2		
	Level 1		
	OFF		

3.1.2.7 MyFavorite

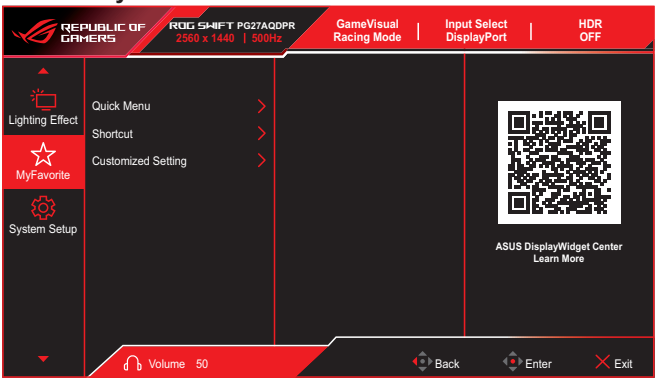

Menu Option		Description	Remark
Quick Menu	Mode1 or Mode2 or Mode3 or Mode4	The Quick Menu lets you assign your favorite monitor settings to four modes (Mode 1–4) for faster access during use.	
Shortcut	Shortcut 1 or Shortcut 2 or Shortcut 3 or Shortcut 4 or Shortcut 5	Configure the functions of the monitor's shortcut keys.	
Customized Setting	Customized Setting 1 or Customized Setting 2	Load or save all monitor settings to quickly switch between different usage scenarios.	

3.1.2.8 System Setup

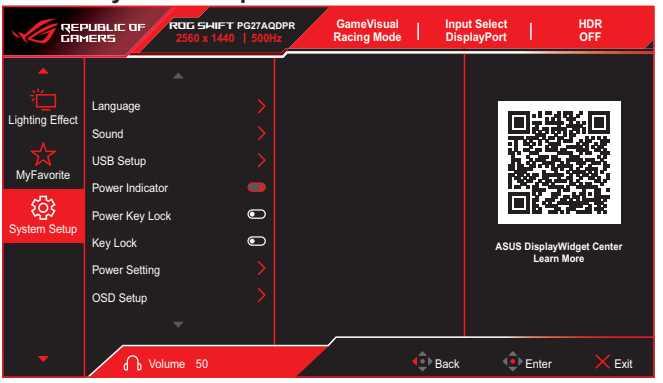

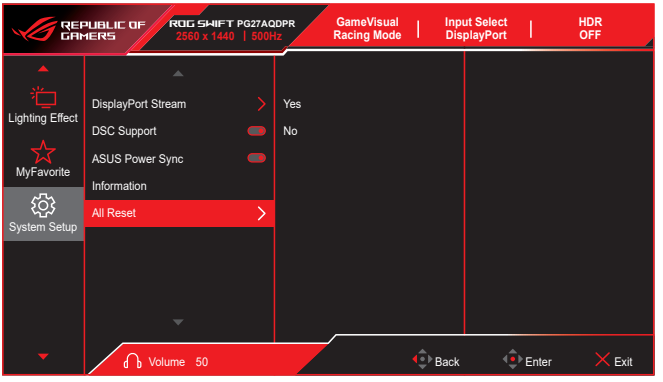

Menu Option		Description	Remark
Language	Language Selection	Supports 23 languages: English, French, German, Italian, Spanish, Dutch, Portuguese, Russian, Czech, Croatian, Polish, Romanian, Hungarian, Turkish, Simplified Chinese, Traditional Chinese, Japanese, Korean, Thai, Indonesian, Persian, Ukrainian, and Vietnamese.	
Sound	Volume (Earphone Out)	Adjustable from 0~100	
	Mute	Switch the monitor sound on or off.	
USB Setup	USB Hub	On During Standby	
		Off During Standby	
Power Indicator	On/Off	Switch the power LED indicator on or off.	

Menu Option		Description	Remark
Power Key Lock	On/Off	Turn the power button on or off.	
Key Lock	On/Off	All function keys are disabled. To unlock, press and hold the down key on the five-way button for five seconds.	
Power Setting	Performance Mode	Offers better performance but consumes more power.	
	Power Saving Mode	Limits brightness and features to save energy. HDR must be turned off before enabling this; a reminder will appear when adjusting brightness.	
OSD Setup	OSD Position	Adjust the horizontal and vertical position of the OSD menu.	
	OSD Timeout	Adjust the menu display duration between 10 and 120 seconds.	
	Transparency	Adjust the OSD background transparency.	
	DDC/CI	Turn on or off the communication between the monitor and computer (auto-enabled with variable refresh rate).	
DisplayPort Stream	DisplayPort 1.2 or DisplayPort 1.4	Select DisplayPort 1.2 or DisplayPort 1.4 or based on the graphics card.	
DSC Support	On/Off	It is specifically designed for highresolution video transmission and high refresh rates. It compresses image data without noticeably degrading quality, allowing displays and devices to transmit large amounts of video data using lower bandwidth.	
ASUS Power Sync	On/Off	Automatically powers the monitor and connected devices on or off (compatible with Apple TV, PlayStation, Xbox, Switch, and more).	
Information	-	Displays the current resolution, refresh rate, and other information of the monitor.	
All Reset	Yes or No	Reset all settings to their factory default values.	

To ensure proper display, the color depth, resolution, or color format may be automatically adjusted when the DSC (Display Stream Compression) function is turned off.

3.2 Aura

Aura is the RGB lighting system controlled by the **Armoury Crate** software, supported on compatible devices such as monitors, motherboards, graphics cards, and desktop PCs. With Aura, you can:

1. Adjust the RGB lighting color.
2. Select different lighting effects.
3. Calibrate the LEDs for more accurate color representation.

To activate Aura:

1. Turn on **Aura Sync** in the OSD menu.
2. Connect the monitor to your computer using the USB Type-B port.
3. Install **Armoury Crate**, then restart your computer.
4. Launch **Armoury Crate** to control the lighting settings.

Overview of Armoury Crate features:

Lighting Control: Customize device lighting colors and brightness.

Lighting Effects: Support for multiple dynamic effects, such as breathing, flashing, and rainbow.

Sync Control: Synchronize lighting across multiple Aura-supported devices.

Color Calibration: Fine-tune RGB colors for more accurate display.

Profiles: Create and save multiple lighting profiles for easy switching.

Note:

- If the USB Type-B connection between the monitor and the computer is disconnected, Aura will be disabled. To resume Aura functionality:
  1.Reconnect the monitor's USB Type-B port to the computer.
  2.Restart the computer.

- For more information, visit: https://rog.asus.com/tag/aura-sync/

Below is the overview of this program.

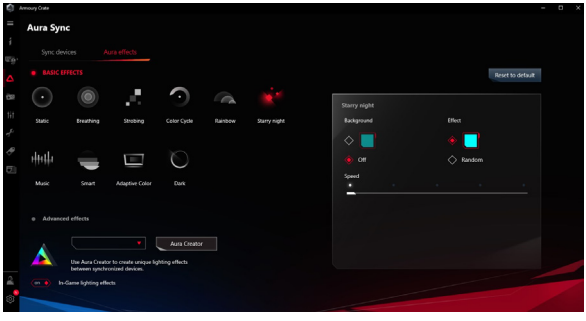

3.3 Display Widget Center

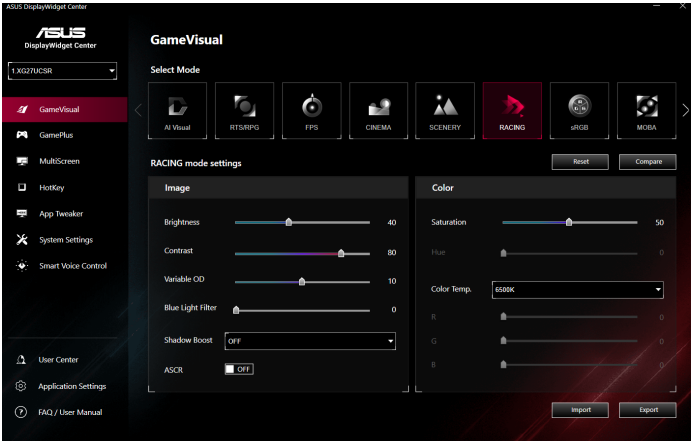

ASUS DisplayWidget Center is a Windows-based utility designed for ASUS monitors. It allows users to adjust monitor settings directly from their desktop using a mouse, eliminating the need for on-screen display (OSD) buttons. It streamlines configuration of color, brightness, contrast, and other advanced features.

System Requirements

*Operating System: Windows 10 (64-bit) or Windows 11 (64-bit)

*Supported Models: Please check the driver section on the ASUS Support Site(https://www.asus.com/support/) by entering your monitor model.

How to Download and Install

1. Go to the ASUS DisplayWidget Center download page.
2. Enter your monitor model in the search bar (e.g., XG27UCSR).
3. Select Driver & Utility Choose your OS version.
4. Download and unzip the DisplayWidget Center installer.
5. Run the setup file and follow the installation steps.
6. Once installed, the shortcut icon will appear on your desktop.

Key Features

1. GameVisual Modes: Change between Scenery, Racing, Cinema, FPS, RPG, and other color presets.
2. GamePlus Tools: Activate crosshairs, FPS counter, sniper, timer, and display alignment tools.
3. Color Adjustment: Fine-tune brightness, contrast, saturation, and gamma directly from your PC.
4. Multi-Screen Tools: Organize and divide your desktop workspace with layout presets.
5. Hotkey Customization: Assign shortcuts for quick access to settings.

6. App Sync: Automatically switch monitor settings based on running applications.
7. Device & System Info: View real-time system and monitor information.

Tips for Users

1. Always check for the latest version through the official ASUS website.
2. If you change monitor models, reinstalling the tool may be necessary.
3. Some features may vary depending on your monitor model and panel type.

3.4 Specifications

Model	PG27AQDPR
Chassis Colors	Black
Panel Type	QD-OLED
Backlight Type	RGB Q-Stripe
Pixel format	26.5"W(674.0mm)
Recommend Resolution	2560x1440
Refresh Rate	500Hz
Aspect Ratio	16:9
Brightness (Typ.)	300nits (Typ.) / 1000nits(peak)
Color Space (DCIP3)	DCI-P3 99% (Typ.)
Intrinsic Contrast Ratio (Typ.)	1.5M:1
Viewing Angle	178°(V) /178°(H)
Display Colors	1.07B
Response Time	0.03ms (min, Gray to Gray)
WHQL	Windows 10/11
Power Consumption	41 W**
Power saving mode	< 0.5W
Power off mode	< 0.3W
Voltage	100~240V, 50/60Hz
Temperature (operating)	0 ~ 40°
Tilt	-5°~20°
Swivel	+/-30
Pivot	-90˚ ~ +90˚
Height Adjustment	110 mm
I/O Port	HDMI v2.1 X2, DisplayPort v1.4(DSC) X1 , USB-Type B X1, USB-Type A (5V / 0.9A) X2 , Earphone Jack X1
Speaker	NA
Phys. Dimension with stand (WxHxD)	611 x 549 x 256 mm (highest) 611 x 439 x 256 mm (lowest)
Phys. Dimension without stand (WxHxD)	611 x 371 x 66 mm
Box Dimension (WxHxD)	860 x 490 x 163 mm
Net Weight (Esti.)	7.5 kg
Net Weight without stand	4.9 kg
Gross Weight (Esti.)	11.3kg

***Specifications subject to change without notice.**
**** Measuring a screen brightness of 200 nits without audio/ USB/ card reader connections.**

3.5 Enabled & Unavailable OSD Feauture Functions

Enabled Function	Unavailable Functions
Variable Refresh Rate	ELMB
ELMB	Variable Refresh Rate, Uniform brightness, Aspect Control, Blue Light Filter, Auto logo brightness, HDR Setting, Sniper
HDR	ELMB, Sniper, GameVisual, Shadow Boost, Brightness,Uniform Brightness, Contrast, Blue Light Filter, Display Color Space,Color Temp., Saturation,Six-Saturation,Gamma ,Power Saving
Aspect Control	ELMB
Blue Light Filter	ELMB, Uniform Brightness
Aura Sync	Aura RGB
Aura RGB	Aura Sync
Pixel Cleaning	Monitor unavailable for approx. 6 minutes
OLED Anti-Flicker	ELMB
Uniform Brightness	ELMB, Blue Light Filter

3.6 Outline Dimensions

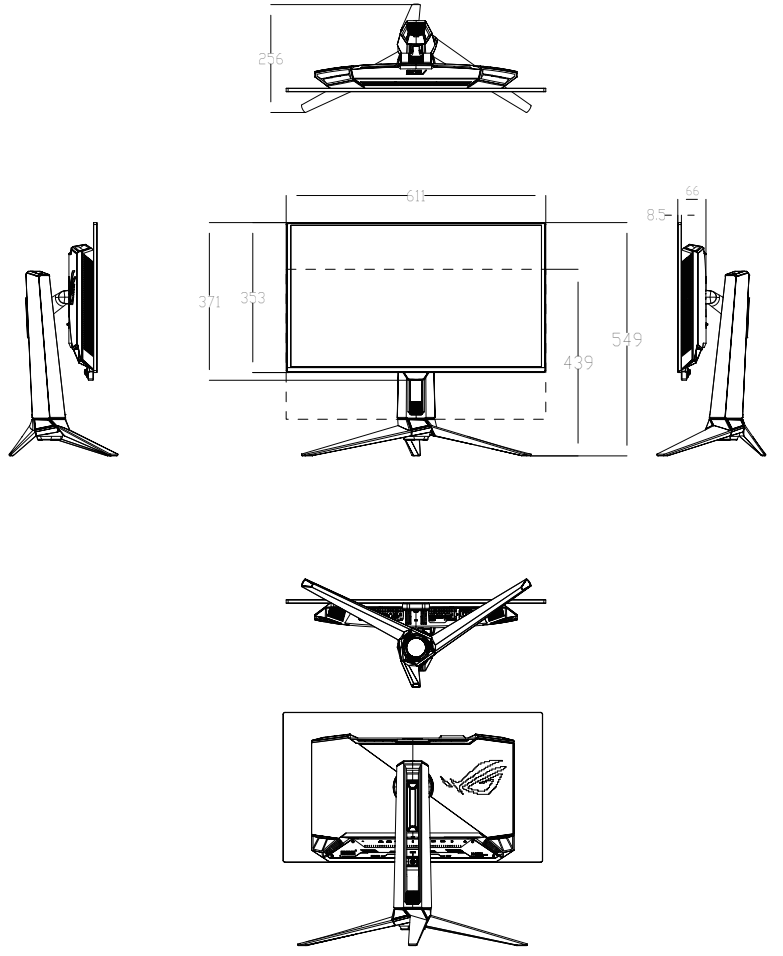

3.7 Troubleshooting (FAQ)

Problem	Possible Solution
Power LED is not ON	• Press any button to check if the monitor is in the ON mode. • Check if the power cord is properly connected to the monitor and the power outlet. • Check the **Power Indicator** function in the OSD menu. Select “ON“ to turn on the power LED.
Power LED is flashing continuously (twice per second), but there is no display (cables and PC source confirmed normal).	• System Safe Mode: The monitor has detected an internal anomaly and entered a protection mode to prevent potential hardware damage. • Technical Service Required: This condition cannot be resolved through standard user adjustments. Please send or bring your monitor to the Service Center for a hardware inspection and log analysis.
How do I set the monitor's refresh rate to the highest value as the monitor spec claimed	• Gaming considerations: Ensure the game titles you are playing support the range • GPU: It is recommended to use NVIDIA RTX 40 series or an AMD RX 7000 series graphic card. • CPU: It is recommended to use a CPU from the 14th generation Intel or AMD Ryzen 7000 series or newer.
The power LED lights red and there is no screen image	• Check if the monitor and the computer are turned on. • Make sure the signal cable is properly connected the monitor and the computer. • Inspect the signal cable and make sure none of the pins are bent. • Connect the computer with another available monitor to check if the computer is properly working.
Screen image is too light or dark	• Adjust the **Contrast** and **Brightness** settings via OSD.
Screen image bounces or a wave pattern is present in the image	• Make sure the signal cable is properly connected to the monitor and the computer. • Move electrical devices that may cause electrical interference.
Screen image has color defects (white does not look white)	• Inspect the signal cable and make sure that none of the pins are bent. • Perform **All Reset** via OSD. • Select the appropriate color temperature (**Color Temp.**) via OSD.

Problem	Possible Solution
HDR content is not played properly	• Make sure the input source supports HDR playback (with proper system settings and latest software). • Make sure the content is HDR encoded.
Power LED is flashing continuously (twice per second), but there is no display (cables and PC source confirmed normal).	• System Safe Mode: The monitor has detected an internal anomaly and entered a protection mode to prevent potential hardware damage. • Technical Service Required: This condition cannot be resolved through standard user adjustments. Please send or bring your monitor to the Service Center for a hardware inspection and log analysis.

3.8 Supported Timing List

QHD Timing:

Support Timing

Timing	Resolution	HDMI	DP
PC Timing	640x480@60Hz	V	V
PC Timing	640x480@75Hz	V	V
PC Timing	800x600@60Hz	V	V
PC Timing	800x600@75Hz	V	V
PC Timing	1024x768@60Hz	V	V
PC Timing	1024x768@75Hz	V	V
PC Timing	1280x720@60Hz	V	V
PC Timing	1280x960@60Hz	V	V
PC Timing	1280x1024@60Hz	V	V
PC Timing	1600x1200@60Hz	V	V
PC Timing	1920x1080@60Hz	V	V
Video Timing	640x480@60Hz	V	V
Video Timing	720x480@60Hz	V	V
Video Timing	720x576@50Hz	V	V
Video Timing	1280x720@50Hz	V	V
Video Timing	1280x720@60Hz	V	V
Video Timing	1920x1080@24Hz	V	V
Video Timing	1920x1080@25Hz	V	V
Video Timing	1920x1080@30Hz	V	V
Video Timing	1920x1080@50Hz	V	V
Video Timing	1920x1080@60Hz	V	V
Video Timing	1920x1080@100Hz	V	V
Video Timing	1920x1080@120Hz	V	V
Video Timing	3840x2160@24Hz	V	
Video Timing	3840x2160@25Hz	V	
Video Timing	3840x2160@30Hz	V	
Video Timing	3840x2160@50Hz	V	
Video Timing	3840x2160@60Hz	V	
Video Timing	3840x2160@100Hz	V	
Video Timing	3840x2160@120Hz	V	

24.5" Simulation Timing

Timing	Resolution	HDMI	DP/USB-C
Detail Timing	2560x1440@60Hz	V	V
Detail Timing	2560x1440@120Hz	V	V
Detail Timing	2352x1324@60Hz	V	V
Detail Timing	2352x1324@120Hz	V	V
Detail Timing	2352x1324@240Hz	V	V
Detail Timing	2352x1324@360Hz	V	V
Detail Timing	2352x1324@500Hz	V	V

4:3 Square Timing

Timing	Resolution	HDMI	DP/USB-C
Detail Timing	2560x1440@60Hz	V	V
Detail Timing	2560x1440@120Hz	V	V
Detail Timing	1024x768@500Hz	V	V
Detail Timing	1280x960@500Hz	V	V
Detail Timing	1728x1080@500Hz	V	V
Detail Timing	1920x1440@500Hz	V	V
Detail Timing	1440x1080@500Hz	V	V

16:9 Timing

Timing	Resolution	HDMI	DP
Detail Timing	1920x1080@240Hz	V	V
Detail Timing	1920x1080@500Hz	V	V
Detail Timing	2560x1440@60Hz	V	V
Detail Timing	2560x1440@120Hz	V	V
Detail Timing	2560x1440@144Hz	V	V
Detail Timing	2560x1440@240Hz	V	V
Detail Timing	2560x1440@500Hz	V	V


REPUBLIC OF
GAMERS